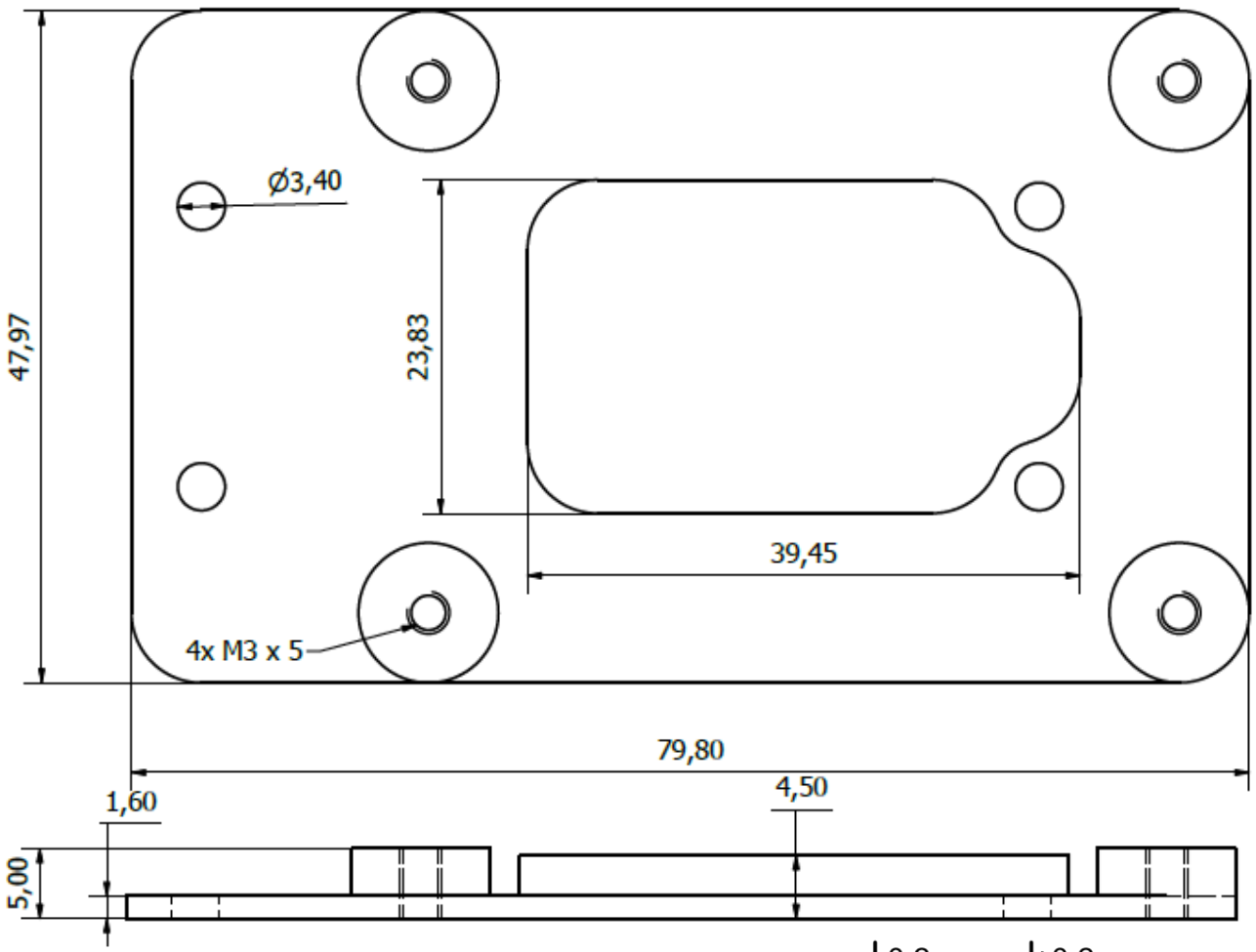

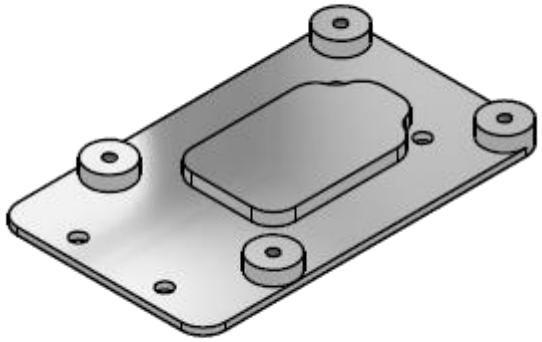

-0.2 +0.2

Rz 25

Designed by Date	35_maintien carte kicker				
Checked by Date	Part Number 34				
	Edges: ISO 13715	Surfaces: EN ISO 1302	General Tolerances DIN ISO 2768 - mK		
Material EN AW 7075	Scale 2:1	Rev A	Size A4	Sheet 1 /1	